eBOX670-883-FL

Fanless Embedded System with LGA1150 Socket Intel® Core™ i7/i5/i3 and Celeron® processors, Q87 Chipset, HDMIx2/VGA/ DisplayPort, 4 GbE LAN, 6 USB 3.0, Wide range DC-in and PCIe Mini Card

NEW

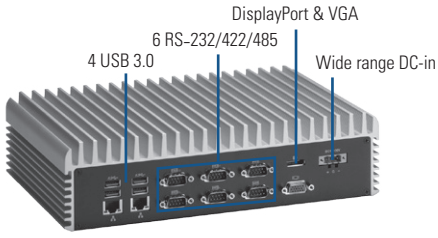

▲ Front view

Specifications

Standard Color	Silver-Black
Construction	Aluminum extrusion and heavy-duty steel, IP40
CPU	LGA1150 socket for Intel® Core™ i7/i5/i3 and Celeron® processors
System Memory	2 x 204-pin DDR3 1333/1600MHz SO-DIMM max. up to 16 GB
Chipset	Intel® Q87
BIOS	AMI
System I/O Outlet	6 x RS-232/422/485 (COM1 ~ 6) 2 x HDMI 1 x VGA 1 x DisplayPort 1 x Audio (Mic-in/Line-out) 4 x 10/100/1000Mbps Ethernet (Intel® i210-IT, i217-V) 6 x USB 3.0 32 channel programmable DI/DO 3 x SMA type connector opening for antenna 1 x VDC 9~36V power input connector 1 x ATX power switch with status indicator
Watchdog Timer	255 levels, 1~255 sec.
Storage	2 x 2.5" SATA HDD drive bay 1 x CFast™ slot 1 x mSATA
Expansion Interface	2 x Full-size PCI Express Mini Card slots (USB+PCI Express signal) 1 x SIM slot
System Indicator	1 x Orange LED for HDD active 2 x Green LED for programmable 1 x Orange/Blue LED for system status (in ATX switch)
Power Supply	DC input 9~36V
Operating Temperature	-40°C ~ +55°C (-40°F~131°F) (with W.T. SSD, CPU TDP 35W)
Storage Temperature	-45°C ~ +80°C (-49°F ~ +176°F)
Humidity	10% ~ 90% , non-condensing
Vibration Endurance	3 Grms w/ CFast™ (5 - 500Hz, X, Y, Z directions)
Dimensions	280 mm (11.02") (W) x 190 mm (7.48") (D) x 70 mm (2.75") (H)
Weight (net/gross)	3.8 kg (8.37 lb)/4.6 kg (10.14 lb)
Certification	CE, EN60950 Compliance
EOS Support	WES8, WES7, Linux

* XPE: Windows® XP Embedded
* WES: Windows® XP Embedded Standard
* WES7: Windows® XP Embedded Standard 7
* WES8: Windows® XP Embedded Standard 8

Packing List

1 x quick manual
1 x driver cd
1 x screw pack
4 x foot pad

* All specifications and photos are subject to change without notice.

© 2014 Axiomtek Co., Ltd. All rights reserved.

Features

- LGA1150 socket for 4th generation Intel® Core™ i7/i5/i3 and Celeron® processors (Haswell) with Intel® Q87 chipset
- Fanless operation design with full feature I/O
- 204-pin DDR3-1333/1600 SO-DIMM max. up to 16 GB
- Two 2.5" SATA drive bay, 1 CFast™ slot and mSATA
- 2 internal PCI Express Mini Card slots, 1 SIM slot
- Supports 2 HDMI, VGA and DisplayPort for triple independent display
- Supports Jumbo Frame (9.5k), WoL, PXE Remote Boot, Teaming
- Supports wide range 9-36VDC

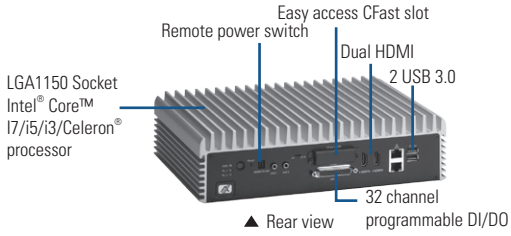

▲ Rear view

Power Protection

DC Version
OVP (over voltage protection)
UVP (under voltage protection)
OCP (over current protection)
SCP
Reverse protection

Ordering Information

Standard	
eBOX670-883-FL-DC	Fanless Embedded System with LGA1150 Socket for Intel® Core™ i7/i5/i3 and Celeron® processors, Intel® Q87 chipset, HDMI x 2/VGA/Display, 4 GbE LAN, 6 USB 3.0, CFast™, PCIe Mini Card and 9~36VDC

Optional	
2.5" SATA HDD	80 GB or above
2.5" SATA SSD	40 GB or above
DDR3 SODIMM	1 GB ~ 16 GB
CFast™	512 MB or above
Wifi module	
3G module	
GPS module	
Wall mount kit	
AC power kit	
Power Cord	

*Specifications and certifications are based on options and may vary.
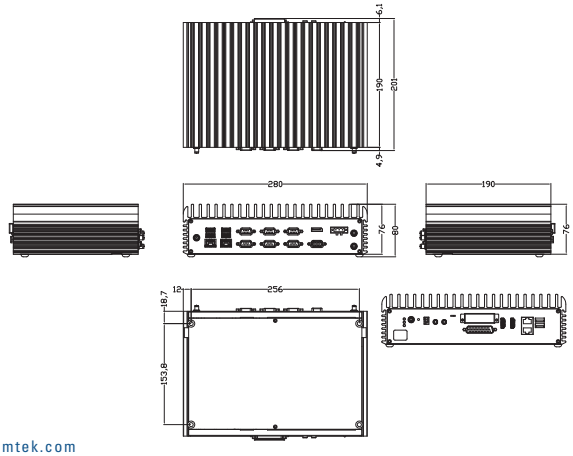
Dimensions